If in doubt – Ask	Dimensions in Millimeters Unless Otherwise Stated	Do Not Scale This Drawing

Punch Information[Note (1)]	
Description	Example
Job Reference	EIJ XXXX
Material	XXXX
Connection	XXXX
Heat No.	HT XXXX
Stem Heat No.	S.HT XXXX
Serial No.	S.N XXXX

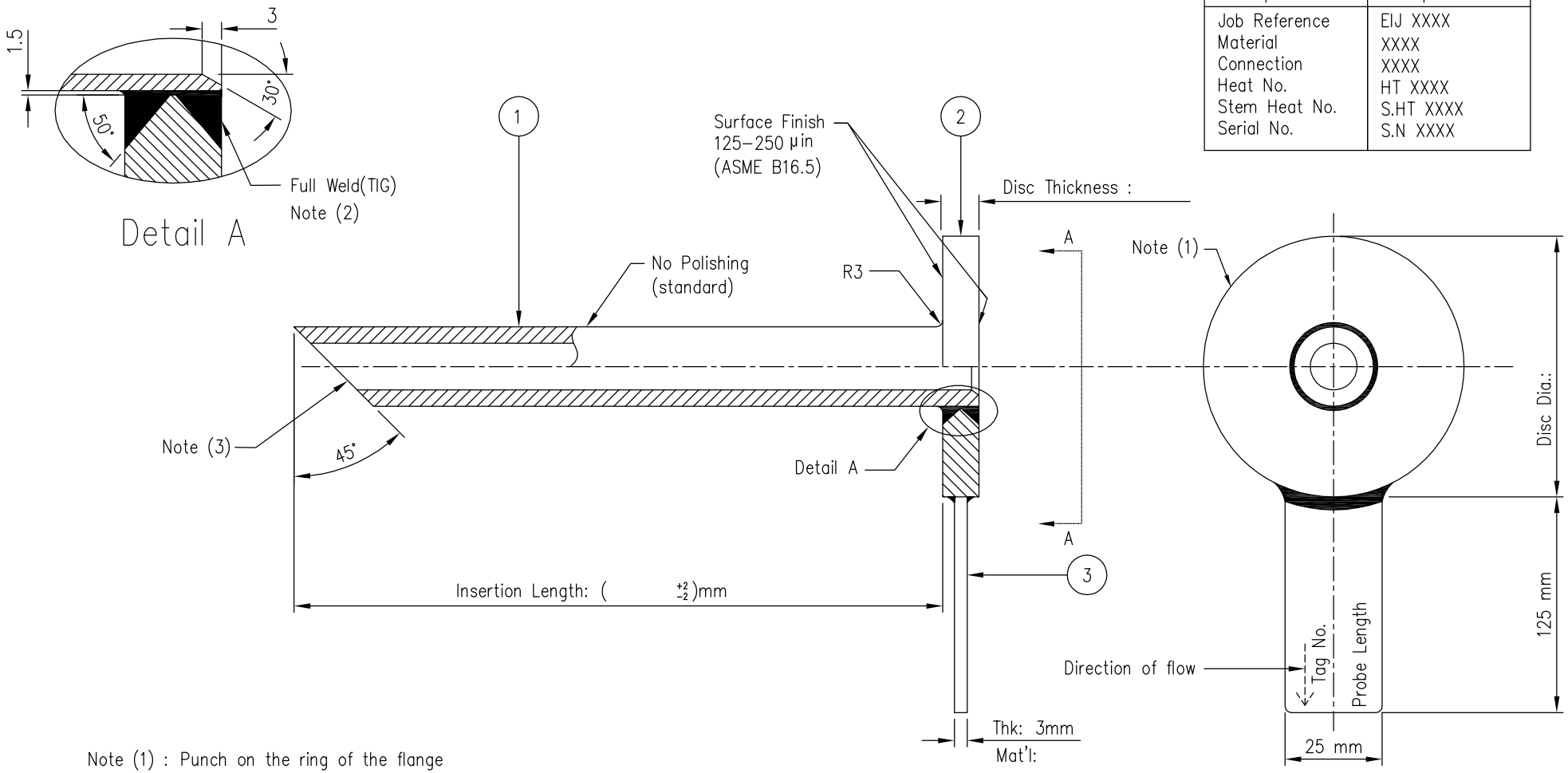

Note (1) : Punch on the ring of the flange
Note (2) : Full penetration weld requires to have min. pipe sch80.
Note (3) : Clean internally from welding mark and dusts
Note (4) : Direction of flow (Pls follow process flow direction)

S/N	DESCRIPTION	A.S PART NO.	MATERIAL	QTY.	REMARK
3	Plate				
2	Disc plate				
1	Seamless Pipe				

Wafer Probe			
Tolerance	Length< 1 mtr (±1mm), 1 mtr< Length (±2mm)< 2 mtr		
CUSTOMER			
Wai Lin	Toe Toe Lwin	QUOTATION NO.	
DRAWN BY	APPROVED BY	STD DWG NO.	ASSP–05–14

ACEZ SENSING PTE LTD
28E PENJURU CLOSE, #01–04
SINGAPORE 609133
TEL: 65–6265 1588 FAX : 65–6264 3992
Website : www.acezsensing.com