| If in doubt – Ask | Dimensions in Millimeters Unless Otherwise Stated | Do Not Scale This Drawing |
|---|---|---|

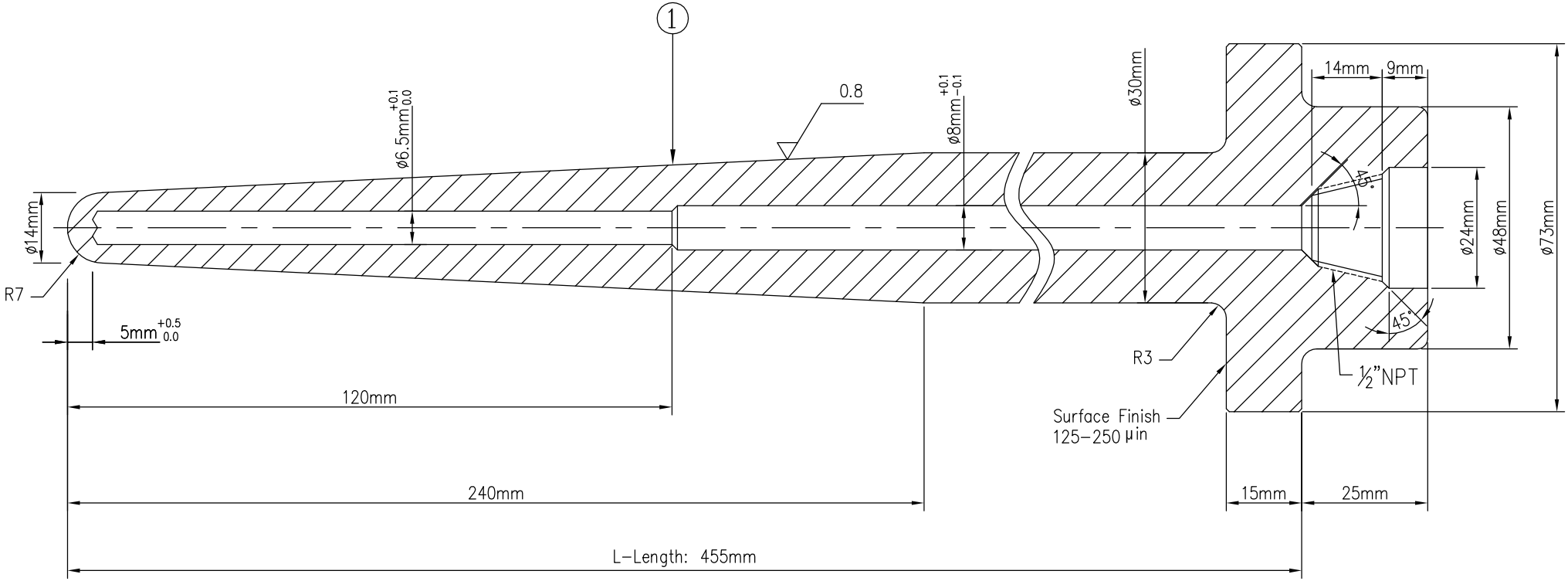


Flanged Thermowell DN 40 ASME Classes up to 1500 Incl

| | | | | |
|---|---|---|---|---|
| Tolerance | Length< 1 mtr (±1mm), 1 mtr< Length (±2mm)< 2 mtr | | | |
| CUSTOMER | | | | |
| Wai Lin | Toe Toe Lwin | QUOTATION NO. | | |
| DRAWN BY | APPROVED BY | DWG NO. | S38.113–0 | |


ACEZ SENSING PTE LTD
28E PENJURU CLOSE, #01–04
SINGAPORE 609133
TEL: 65–6265 1588 FAX : 65–6264 3992
Website : www.acezsensing.com


| S/N | DESCRIPTION | A.S PART NO. | MATERIAL | QTY. | REMARK |
|---|---|---|---|---|---|
| 1 | Thermowell (drilled bar stock) | | | | |