If in doubt – Ask	Dimensions in Millimeters Unless Otherwise Stated	Do Not Scale This Drawing

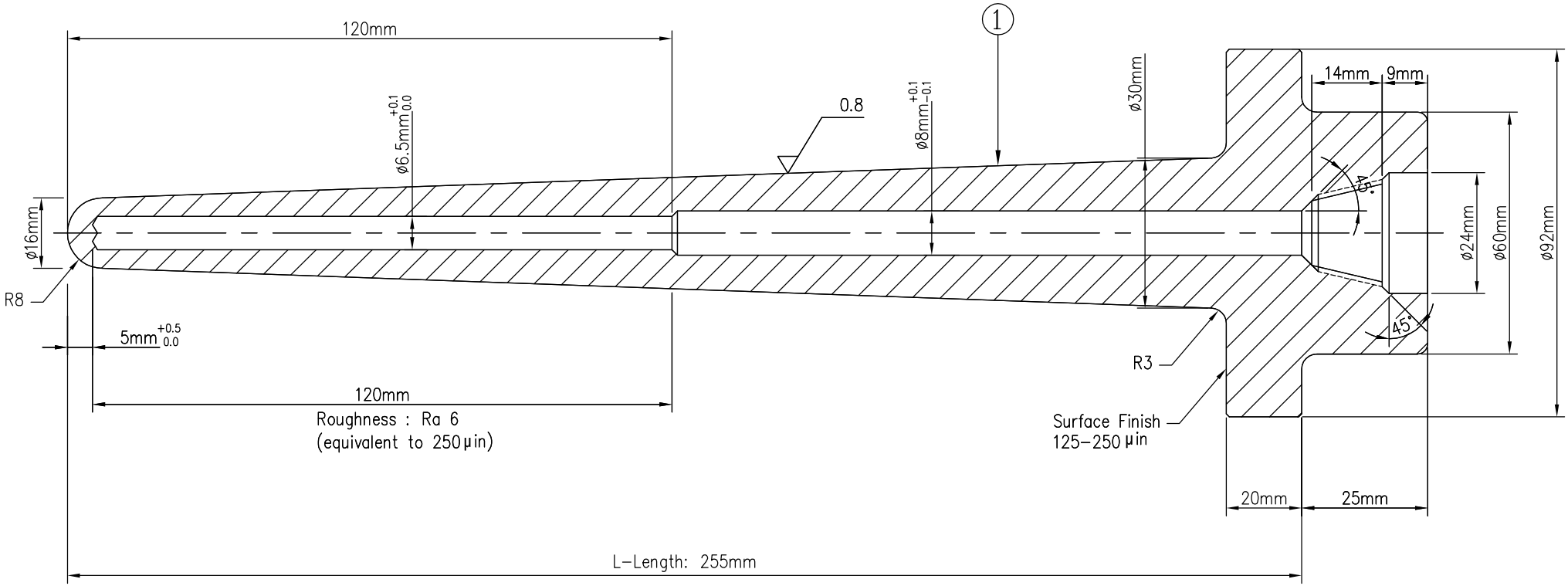

Flanged Thermowell DN 50 ASME Classes up to 2500 Incl

Tolerance	Length< 1 mtr (±1mm), 1 mtr< Length (±2mm)< 2 mtr			
CUSTOMER				
Wai Lin	Toe Toe Lwin	QUOTATION NO.		
DRAWN BY	APPROVED BY	DWG NO.	S38.114–0	

ACEZ SENSING PTE LTD
28E PENJURU CLOSE, #01–04
SINGAPORE 609133
TEL: 65–6265 1588 FAX : 65–6264 3992
Website : www.acezsensing.com

S/N	DESCRIPTION	A.S PART NO.	MATERIAL	QTY.	REMARK
1	Thermowell (drilled bar stock)				