Dimensions in Millimeters Unless Otherwise Stated	Do Not Scale This Drawing

MODEL: MLTX.....

1. Housing Material: AL(ADC-12)
2. Flange Material: SUS 304 or SUS 316
   Screw ANSI,JIS,DIN 3/4"~6",PT, PF,BSP,NPT
3. Tube Material: SUS 304 or SUS 316 --ø12.7,ø14.0,ø17.2,ø21.7 up to 2 meter
4. Float Material: SUS 304 or SUS 316
   Float Specification:
   Size: ø41*38; Max.operating Pressure: 30kg/cm^2 S.G.: 0.7
   Size: ø45*55; Max.operating Pressure: 12kg/cm^2 S.G.: 0.65
   Size: ø52*52; Max.operating Pressure: 30kg/cm^2 S.G.: 0.55
   Size: ø73*73; Max.operating Pressure: 30kg/cm^2 S.G.: 0.55
   Size: ø75*108; Max.operating Pressure: 10kg/cm^2 S.G.: 0.5
   Size: ø100*100; Max.operating Pressure: 30kg/cm^2 S.G.: 0.5
   Size: ø150*150; Max.operating Pressure: 30kg/cm^2 S.G.: 0.45
5. Accessories: TAB-2100 Transmitter

DESCRIPTION	PART NO. & SPECTIFICATION
Operation Temp.	-20~120°C
Resolution	±6.35 mm/±12.7 mm(2 wire)
Contact Rating	max.50W/250vac
Enclosure Rating	IPX65
Explosion-proof Specification	Ex d IIB T3~T6

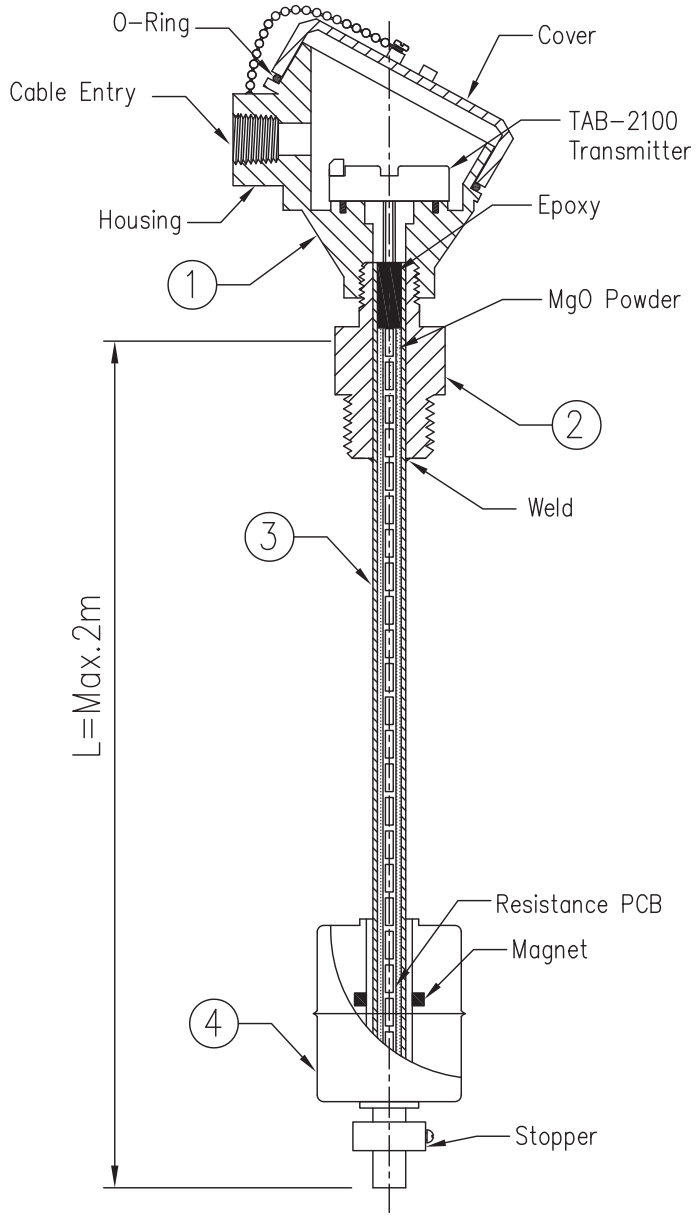

ACEZ SENSING PTE LTD
28E PENJURU CLOSE, #01-04
SINGAPORE 609133
TEL: 65-6265 1588 FAX : 65-6264 3992
Website : www.acezsensing.com

Scale :		Material :				Remove All Burrs and Sharp Enges	Job No. :	
Issue	Date :	Issue	Date :	Issue	Date : 20-Jan-2010	Tolerance Unless Otherwise Stated Full Milimeters +/- 0.5mm One Decimal Place +/- 0.15mm Two Decimal Place +/- 0.025mm	Drawn :	Float Transmitter
R.2	Drawn By :	R.1	Drawn By :	R.0	Drawn By: Min Min Oo		Date :	
	Approved		Approved		Approved: Justin		Appr'd	
						Customer	Date :	
						Order No.	Certified	10-1-L003(4-4)
							Date :	